ÉMI Non-Profit Limited Liability Company
for Quality Control and Innovation in Building
Address: 2000 Szentendre, Dózsa György út 26.
Phone: (+36-1)-372-6100, Telefax: (+36-1)-386-8794, E-mail: info@emi.hu

TMI-6/2018

CERTIFICATE

of

FIRE PREVENTION CONFORMITY

'abs EI SLIDE' fire compartment closure kit for conveyor systems

Name of the building structure:
'abs EI SLIDE' fire compartment closure kit for conveyor systems

Applicant and holder of the Certificate of Fire Prevention Conformity (TMI):
abs Sicherungstechnik GmbH & Co. KG
D-88662 Überlingen, Rengoldshauser str. 4.
Germany

Manufacturers: abs Sicherungstechnik GmbH & Co. KG
D-55129 Mainz, Robert-Koch str. 19b.
Germany

Distributor: abs Sicherheitstechnik Vertriebs- und Service GmbH
D-55129 Mainz, Robert-Koch str. 19b.
Germany

This certificate was issued by ÉMI Non-profit Llc., based on assessment of the test results detailed in the European Technical Assessment **ETA-16/0938** dated on **27 April, 2018** and in the report belonging to it, furthermore according to data, terms and conditions as well as regulations recorded on the reverse side (and on supplementary sheet(s)).

Field of application of the building structure:
Fire compartment closure kit for conveyor systems.

The Certificate of Fire Prevention Conformity is valid until **30 June 2023**.

Szentendre, 27 June 2018

Péter Tóth
Technical Director

Stamp

This Certificate of Fire Prevention Conformity consists of 10 pages and 1 Annex (27 pages) forming part of this document.

This is the English translation of the document issued in Hungarian on the 12 June 2018 under project no. MT-T244X-15032-2018. In case of doubt the Hungarian version is authoritative.

Name of the testing unit:

ÉMI Non-Profit LLC. ÉMI Construction Testing Laboratory Fire Testing Laboratory* (2000 Szentendre, Dózsa György út 26.)

* The Fire Testing Laboratory is a full member of EGOLF (European Group of Organizations for Fire Testing; Inspection and Certification).

Standards and regulations taken into account during the test of the building structure:

MSZ EN 1634-1:2014, MSZ EN 1366-7:2005, MSZ EN 13501-1:2007+A1:2010, MSZ EN 13501-2:2016 as well as Part five of National Fire Code (OTSZ) issued with BM decree 28/2011. (IX. 6.) and the National Fire Code (OTSZ) issued with BM decree 54/2014. (XII. 5.).

Short description and technical data of the product:

Elements of abs EI SLIDE fire section terminal:

- Single-leaf sliding leaf

  The about 62 mm thick sliding leaf consists of various calcium silicate boards (40 mm and 20 mm) which are secured with water glass adhesive. Embedded in the calcium silicate boards in the area of points of load application (amongst others fixing of rollers and guides) are steel hollow profiles (40 mm × 40 mm × 2 mm) located. The front sides are covered with 0,75 mm thick steel plates. At the lateral faces are angle profiles located. The components are connected by screw joints of the steel plate with the steel hollow profiles.

  In the case of continuous conveyors a sealing segment – consisting of a steel hollow profile (t > 2 mm) covered with calcium silicate boards or exclusively consisting of calcium silicate boards – is placed at the closing edge of the sliding leaf.

  The sidewise depth of coverage of sliding leaf and wall as well as the coverage of sliding leaf and floor amounts to 90 mm.

  The upper depth of coverage of sliding leaf and wall amounts to 120 mm.

- Fixed panel with clearance for the conveyor

  The fixed panel consists of a core of mineral wool, covered with fire protection boards or steel hollow profiles, covered with fire protection boards or exclusive fire protection boards or lightweight concrete brick (density: ≥ 450 kg/m^3, min. thickness: according to Table 1-2 and Table 5-7). It is secured to the wall via brackets or by means of direct screw connection.

  The clearance in the fixed panel is configured for the respective conveyor technology. Various intumescent materials are used in the necessary functional gaps. In the fixed panel may be inserted cable penetration seals (see Table 8).

- Guide for the sliding leaf

  The guiding rails, running gears, running rails and wall fastenings have to be dimensioned according to dimension and weight of the sliding leaf. They must comply with the declarations of the drawings of the control plan at least.

  - Vertical closing and tilting on a wall as well as horizontal closing on/under the floor and tilting on the floor

    Rollers secured at the side of the sliding leaf are guided in a running rail which is fixed to the wall and on/under the floor, respectively. In the case of these sliding leafs a grip plate secured on the side of the sliding leaf or a slip in guide is necessary if the clear width of the closure is greater than 1250 mm (wall) and 500 mm (on/under floor) respectively.

Closures, which are closing from bottom to top, have to be provided with additional devices against opening in the case of fire (e.g. a thermally actuated locking device) if the sliding leaf exceeds a defined weight.

- Horizontal closing on wall

  The sliding leaf is suspended from the running rail by running gears. Alternatively, the running gears may be positioned at the bottom edge (upright mounted). The rail is secured to the wall using brackets. For the opposite guidance guide roller or guide plates with slide blocks are located at the bottom line of the closure and at the top edge of the closure, respectively.

  If the clear height of the closure is greater than 833 mm a grip late or a sliding guide secured on the side of the sliding leaf is necessary.

– Seal system

  In the overlap of the sliding leaf and adjacent wall on the side of the sliding leaf facing the wall additional stripes of an intumescent material are positioned.

  The closure in the conveyor technology area is sealed by sealing segments on the sliding leaf and the fixed panel.

  The sealing segments on the sliding leaf consist of a steel hollow profile (t ≥ 2 mm) covered with calcium silicate boards or exclusively calcium silicate boards. Strips of calcium silicate boards must be positioned in the gaps between conveyor technique and fixed panel. Strips of an intumescent material must be positioned in the residual gaps.

– Closing device (closing weight system)

  Fire section terminal applicable for conveyor systems type abs EI SLIDE shall be closed via stored mechanical energy (closing weight system, deadweight of the sliding leaf).

Design/conformity certification /type test values

Table 1

Characteristics of the building structure (and their dimensions)	Value/data	Test/assessment method
„abs EI SLIDE" fire compartment closure kit in internal walls		
Fire resistance (minute) Valid for application in solid walls of high density (brick wall, concrete wall). (Wall density: ≥ 800 kg/m^2, thickness: ≥ 150 mm)	E 120, EI_2 90, EI_1 60 [1] [2]	MSZ EN 1366-7:2005 MSZ EN 13501-2:2016
Fire resistance (minute) Valid for application in solid walls of low density (aerated concrete wall). (Wall density: ≥ 450 kg/m^2, thickness: ≥ 150 mm)	E 120, EI_2 90, EI_1 60 [1] [2]	
Fire resistance (minute) Lightweight wall in accordance with annex 1. in 3 page, fastening version 3. (Wall thickness: ≥ 100 mm)	EI_2 90, EI_1 90 [1] [2]	

[1] Classification according to self-closing test cycle:
- Installation in walls:
  - vertical closing: C5
  - horizontal closing: C5
- Installation in floors: C5

[2] Clearance of the wall opening. see Table 5

Table 2

Characteristics of the building structure (and their dimensions)	Value/data	Test/assessment method
„abs EI SLIDE" fire compartment closure kit in internal floors		
Fire resistance (minute) Valid for application in solid floors of high density (brick floor, concrete floor). (Floor density: ≥ 800 kg/m^2, thickness: ≥ 200 mm)	EI_2 90, EI_1 60 [1] [2]	MSZ EN 1366-7:2005 MSZ EN 13501-2:2016
Fire resistance (minute) Valid for application in solid floors of low density (aerated concrete floor). (Floor density: ≥ 450 kg/m^2, thickness: ≥ 150 mm)	EI_2 90, EI_1 60 [1] [2]	

[1] Classification according to self-closing test cycle:
- Installation in walls:
  - vertical closing: C5
  - horizontal closing: C5
- Installation in floors: C5

[2] Clearance of the floor opening. see Table 6

Table 3

Characteristics of the building structure (and their dimensions)	Value/data	Test/assessment method
abs EI SLIDE fire compartment closure kit for conveyor systems		
Fire resistance (minute)		
– In case of applying for chain conveyor systems (see page 15 in Annex 1)		
• steel profile	EI 120 [1] [2]	
• aluminium profile	EI 90 [1] [2]	
– In case of applying for roller conveyor systems (see page 16 in Annex 1)		
• steel profile	EI 120 [1] [2]	MSZ EN 1366-7:2005 MSZ EN 13501-2:2016
• aluminium profile	EI 90 [1] [2]	
– In case of applying for belt conveyer system (see page 17 in Annex 1)		
• steel profile	EI 120 [1] [2]	
• aluminium profile	EI 90 [1] [2]	
– In case of applying for crane runway system (see page 21 in Annex 1)		
• steel profile	EI 120 [1] [2]	

(Table 3 continues)

Characteristics of the building structure (and their dimensions)	Value/data	Test/assessment method
abs EI SLIDE fire compartment closure kit for conveyor systems		
Fire resistance (minute)		MSZ EN 1366-7:2005 MSZ EN 13501-2:2016
– In case of applying for container conveyor system (see pages 18 and 20 in Annex 1)		
• steel profile or aluminium rack with separating cut	EI 120 [1] [2]	
– In case of applying for electro-suspension track (see page 19 in Annex 1)		
• steel profile or aluminium rack with separating cut	EI 90 [1] [2]	
– In case of applying for lifter system (see page 22 in Annex 1)		
• steel profile	EI 120 [1] [2]	
– In case of applying for gravity chute system (see page 23 in Annex 1)		
• steel profile	EI 120 [1] [2]	
– In case of applying for round belt system (see page 24 in Annex 1)		
– In case of applying for paper conveyor system (see page 25 and 26 in Annex 1)	EI 120 [1] [2]	
– In case of applying for Power & free steel system (see page 27 in Annex 1)	EI 120 [1] [2]	

[1] Classification according to self-closing test cycle:
- Installation in walls:
  - vertical closing: C5
  - horizontal closing: C5
- Installation in floors: C5

[2] Valid only if requirements of Table 7 and Table 8 are also satisfied

Reaction to fire requirements for structural elements used for fire compartment closure kit for conveyor systems are involved in Table 4.

Table 4

Characteristics of the building structure (and their dimensions)	Name of the material	Value/data	Test/assessment method
Reaction to fire (-)			MSZ EN 13501-1:2007+A1:2010
– elements of the slider leaf and fixed panel	• steel sheet	A1	
	• calcium silicate boards	A1	
	• gypsum boards	A1	
	• gypsum mortar	A1	
	• mineral fibre boards	min. E	
	• water glass glue	A1	
	• knitted glass fabric	min. E	
– guide elements	• steel	A1	
– seal system	• intumescent material	min. E	
– cable penetration seals	• intumescent material	min. E	
– closing device	• steel	A1	
– fixing material	• steel	A1	

Table 5

Wall structures where the fire compartment closure kit for conveyor systems is applied	Clearance of the component opening		
	max. clear width [mm]	max. clear height [mm]	Max. surface (direction of closing) [m^2]
Solid wall of high density, brick wall, concrete wall (Density of wall: ≥ 800 kg/m^2, thickness: ≥ 150 mm)	2500 (E 120)	2500 (E 120)	6,25 (E 120)
	3750 (EI_2 90, EI_1 60)	3750 (EI_2 90, EI_1 60)	9,38 (EI_2 90, EI_1 60)
Solid wall of low density, aerated concrete wall (Density of wall: ≥ 450 kg/m^2, thickness: ≥ 150 mm)	2500 (E 120)	2500 (E 120)	6,25 (E 120)
	3750 (EI_2 90, EI_1 60)	3750 (EI_2 90, EI_1 60)	9,38 (EI_2 90, EI_1 60)
Lightweight wall in accordance with annex 1. in 3. page, fastening version 3. (Wall thickness: ≥ 100 mm)	2000 (EI_2 90, EI_1 90)	2000 (EI_2 90, EI_1 90)	4,00 (EI_2 90, EI_1 90)

Table 6

Floor structures where the fire compartment closure kit for conveyor systems is applied	Clearance of the component opening		
	max. clear width [mm]	max. clear height [mm]	Max. surface (direction of closing) [m^2]
Solid floor of high density, brick floor, concrete floor (Density of floor: ≥ 800 kg/m^2, thickness: ≥ 200 mm)	2090 (EI_2 90, EI_1 60)	2090 (EI_2 90, EI_1 60)	2,34 (EI_2 90, EI_1 60)
Solid floor of low density, aerated concrete floor (Density of floor: ≥ 450 kg/m^2, thickness: ≥ 150 mm)	2090 (EI_2 90, EI_1 60)	2090 (EI_2 90, EI_1 60)	2,34 (EI_2 90, EI_1 60)

Table 7

Type of conveyor system	Minimum depth of the seal on the fixed panel (sealing via calcium silicate boards) [mm]	Minimum depth of the sealing element on the sliding leaf (calcium silicate boards) [mm]
In case of applying for chain conveyor systems (see page 15 in Annex 1) • steel profile • aluminium profile	 175 250	 166 241
In case of applying for roller conveyor systems (see page 15 in Annex 1) • steel profile • aluminium profile	 175 250	 166 241
In case of applying for belt conveyer system (see page 17 in Annex 1) • steel profile • aluminium profile	 175 250	 166 241
In case of applying for crane runway system (see page 21 in Annex 1) • steel profile	 175	 166
In case of applying for container conveyor system (see page 18 and 20 in Annex 1) • steel profile or aluminium rack with separating cut	175	166
In case of applying for electro-suspension track (see page 19 in Annex 1) • steel profile or aluminium rack with separating cut	225	217

(Table 7 continues)

Type of conveyor system	Minimum depth of the seal on the fixed panel (sealing via calcium silicate boards) [mm]	Minimum depth of the sealing element on the sliding leaf (calcium silicate boards) [mm]
In case of applying for lifter system (see page 22 in Annex 1) • steel profile	175	166
In case of applying for gravity chute system (see page 23 in Annex 1) • steel profile	175	166
In case of applying for round belt system (see page 24 in Annex 1)	100	87
In case of applying for paper conveyor system (see page 25 and 26 in Annex 1)	300	297
In case of applying for Power & free steel system (see page 27 in Annex 1)	175	166

Table 8

Cable penetration seal	Fire resistance	Clearance of the component opening		
		max. clear width [mm]	max. clear height [mm]	Max. surface (direction of closing) [m²]
Hensomastik 5 KS Viskos (ETA-10/0431)	EI 90	220	110	0,0165
ZZ-Stein 200 NE (ETA-12/0214)	EI 90	220	110	0,0165
ZZ-Brandschutzsilikon NE (ETA-13/0123)	EI 90	220	110	0,0165
ZZ-Brandschutzschaum 2K NE (ETA-11/0206)	EI 90	220	110	0,0165

Comment: Furthermore, the penetration of cables in continuous profiles in the area of the fixed panel is permitted (see technical documentation) provided that the relevant provisions for electrical installations are observed.

Conditions on which the product is suitable for its intended use:

Conditions of application based on the National Fire Code (OTSZ) issued with BM decree 28/2011. (IX. 6.):

'abs EI SLIDE' fire compartment closure kits can be applied taking requirements of Table 1, Table 4-5 and Table 8 into account

- as fire resistant closure kits built into fire resistant walls or into firewalls along boundaries of fire compartments without limitation from fire safety aspect;
- as fire resistant closure kits built into external firewall of a building
  - with fire resistance grade III and with maximum 5 storeys,

- with fire resistance grade IV and with maximum 2 storeys,
- with fire resistance grade V and with maximum 1 storey,

- as fire resistant closure kits built into fire resistant wall or firewall
  - of a hall building with fire resistance grade I-IV.

'abs EI SLIDE' fire compartment closure kits can be applied in floors when related reaction to fire and fire resistance requirements are jointly satisfied and taking conditions above and requirements of Table 2, Table 4, Table 6, Table 8 into account.

'abs EI SLIDE' fire compartment closure kits can be applied taking requirements of Table 3-4 and Table 7-8 into account for conveyor systems without limitation from fire safety aspect.

Installed fire compartment closure kits and supporting constructions always have to satisfy related reaction to fire and fire resistance requirements.

Instructions of manufacturer must be observed during installation.

Hungarian installation manual (user manual) has to be provided together with the product.

Conditions of application based on the National Fire Code (OTSZ) issued with BM decree 54/2014. (XII. 5.):

It is permitted to make openings supplied with fire resistant closures in firewalls to ensure interconnections and technological connections of buildings; however, the summarized area of these openings may not exceed 10% of the surface area of the firewall.

'abs EI SLIDE' fire compartment closure kits can be applied taking conditions above and requirements of Table 1, Table 4-5 and Table 8 into account as fire resistant closure kits built into firewalls or into fire resistant walls without limitation from fire safety aspect.

'abs EI SLIDE' fire compartment closure kits can be applied in floors when related reaction to fire and fire resistance requirements are jointly satisfied, also taking conditions above and requirements of Table 2, Table 4, Table 6, Table 8 into account.

The switch off of a conveyor system crossing a fire compartment boundary and fire resistant closing of the opening has to be controlled without delay by the fire detection system, installed at least in one of the affected fire compartments, in case of fire alarm right after clearance of the opening on the fire compartment boundary.

'abs EI SLIDE' fire compartment closure kits can be applied for conveyor systems taking conditions above and requirements of Table 3-4 and Table 7-8 into account without limitation from fire safety aspect.

Installed fire compartment closure kits and supporting constructions always have to satisfy related reaction to fire and fire resistance requirements.

Instructions of manufacturer must be observed during installation.

Hungarian installation manual (user manual) has to be provided together with the product.

Annex

Annex 1: Technical documentation (27 pages)

The holder of the TMI shall have liability to notice all changes in the product design, material or in the production circumstances. Then the ÉMI Non-Profit LLC decides if the TMI may continue to remain in force or a new procedure should be initiated by simultaneous withdrawal of the TMI. If, due to any changes, the TMI has been issued again with the same topic number, the certification with the later date of issue shall be considered as valid in all cases and the former shall be void.

This TMI does not cover all the technical characteristics of the product, is not a substitute for the other permissions necessary for the distribution, application, installation and use of product (i.e. National Technical Assessment) and will not entitle the manufacturer or the distributor to indicate the CE sign of conformity either on the product or on its packing.

The TMI can only be reproduced in its entirety. For the publication in abstract the written consent of the ÉMI Non-Profit LLC. is required. Validity of the TMI can be checked on the website of the ÉMI Non-Profit LLC. (www.emi.hu).

Tamás Kiss-Sponga
Test engineer

Gergely Kakasy
Head of Fire Testing Laboratory

ÉMI ÉPÍTŐIPARI MINŐSÉGELLENŐRZŐ INNOVÁCIÓS NONPROFIT KFT.
SZÉKHELY
2000 Szentendre,
Dózsa György út 26.
POSTACÍM
2001 Szentendre, Pf.: 180
ADÓSZÁM
20783185-2-13

Annex

Annex 1: Technical documentation (27 pages)

The holder of the TMI shall have liability to notice all changes in the product design, material or in the production circumstances. Then the ÉMI Non-Profit LLC decides if the TMI may continue to remain in force or a new procedure should be initiated by simultaneous withdrawal of the TMI. If, due to any changes, the TMI has been issued again with the same topic number, the certification with the later date of issue shall be considered as valid in all cases and the former shall be void.

This TMI does not cover all the technical characteristics of the product, is not a substitute for the other permissions necessary for the distribution, application, installation and use of product (i.e. National Technical Assessment) and will not entitle the manufacturer or the distributor to indicate the CE sign of conformity either on the product or on its packing.

The TMI can only be reproduced in its entirety. For the publication in abstract the written consent of the ÉMI Non-Profit LLC. is required. Validity of the TMI can be checked on the website of the ÉMI Non-Profit LLC. (www.emi.hu).

Tamás Kiss-Sponga
Test engineer

Gergely Kakasy
Head of Fire Testing Laboratory

ÉMI ÉPÍTŐIPARI MINŐSÉGELLENŐRZŐ INNOVÁCIÓS NONPROFIT KFT.
SZÉKHELY
2000 Szentendre,
Dózsa György út 26.
POSTACÍM
2001 Szentendre, Pf.: 180
ADÓSZÁM
20783185-2-13
54.

Project number: MT-T244X-15032-2018

Subject number: TMI-6/2008

ANNEX 1
Technical documentation

(This Annex consists of 27 pages)

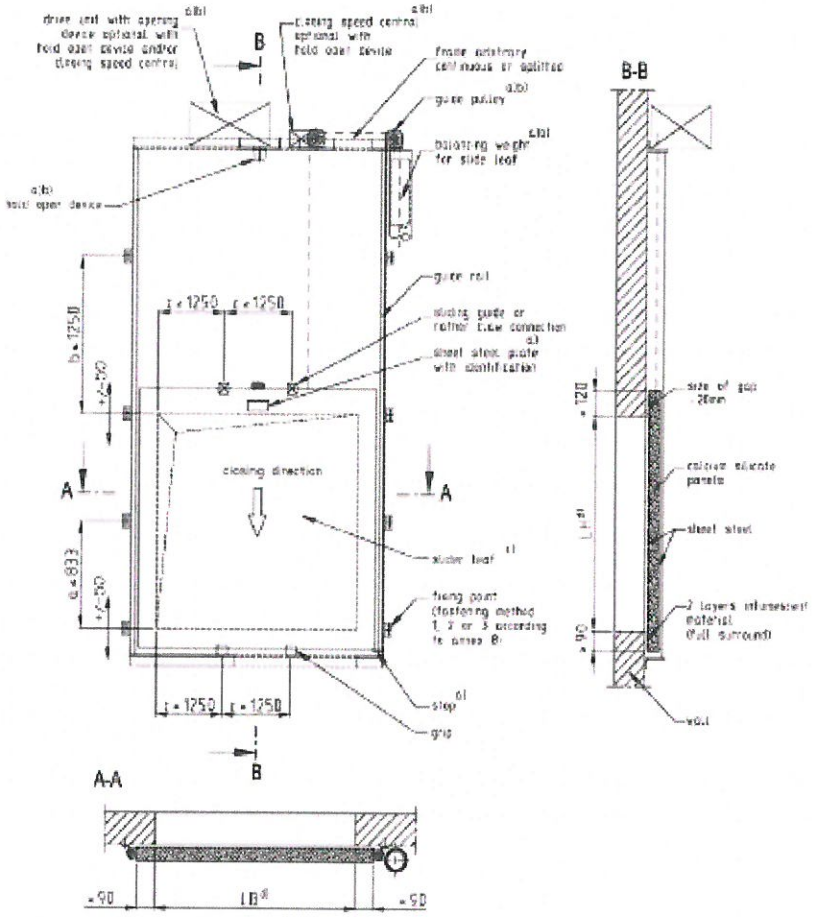

a) arbitrary position, number and design
b) optional
c) depiction of splitted conveyor technique, see additional annexes for examples of application of not splitted conveyor technique.
d) according to the table 1 of this ETA.

dimensions in mm

abs EI SLIDE	Annex 1
Overview – closing direction downwards form above Wall installation	

Page 10 of European Technical Assessment
ETA-16/0938 of 27 April 2018

English translation prepared by DIBt

Deutsches Institut für Bautechnik DIBt

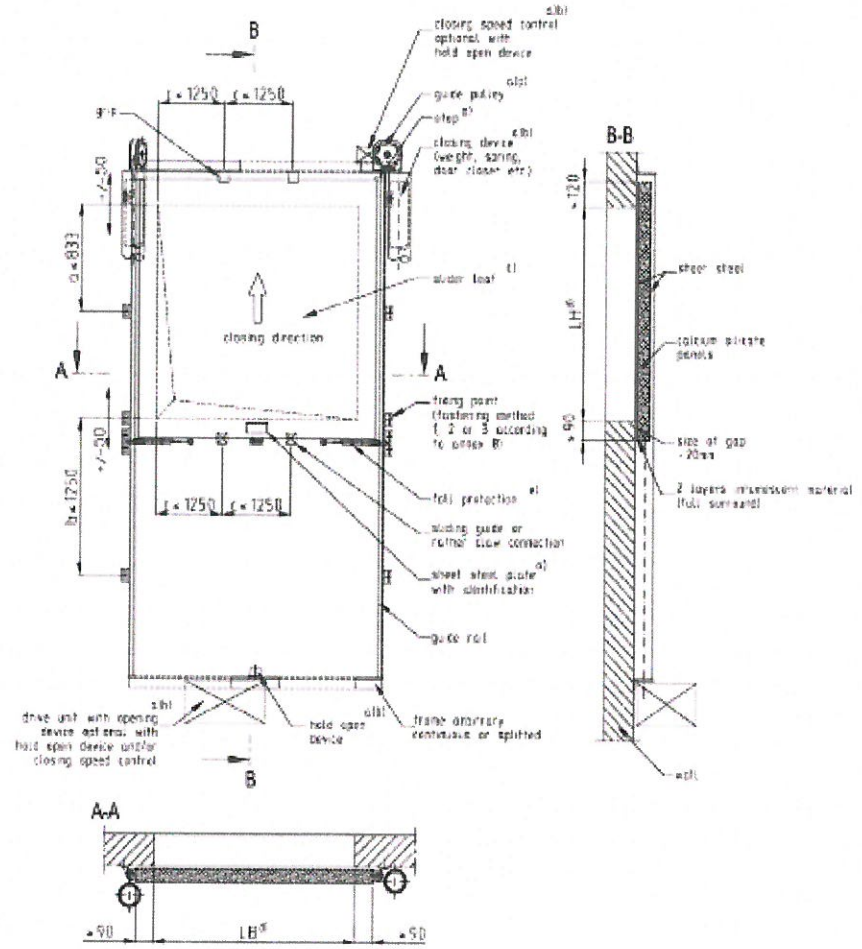

a) arbitrary position, number and design
b) optional
c) depiction of splitted conveyor technique, see additional annexes for examples of application of not splitted conveyor technique.
d) according to the table 1 of this ETA
e) Requirement of the fall protection is regulated in the checking and monitoring plan

dimensions in mm

abs EI SLIDE	Annex 2
Overview – closing direction upwards from below Wall installation	

Page 11 of European Technical Assessment
ETA-16/0938 of 27 April 2018

English translation prepared by DIBt

Deutsches Institut für Bautechnik DIBt

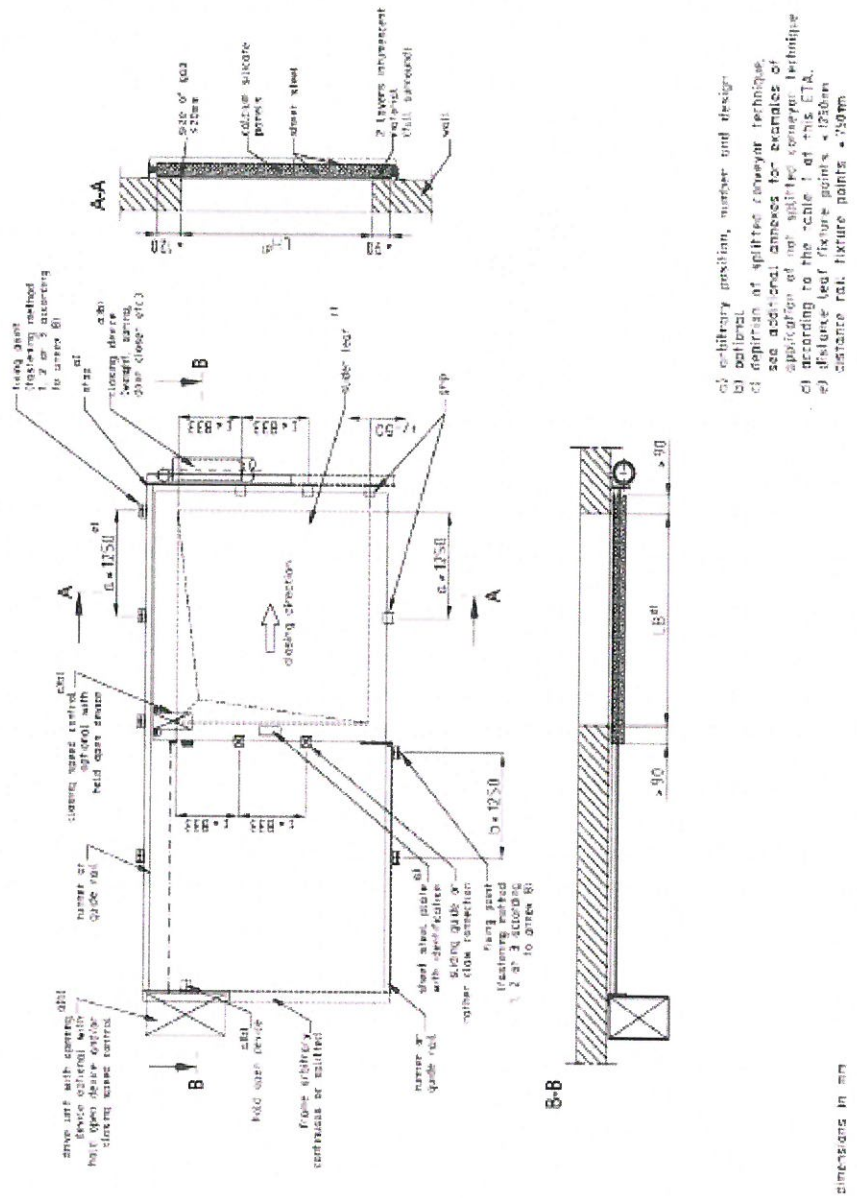

abs EI SLIDE	
Overview – horizontal closing direction Wall installation	Annex 3

Z15206.18 8.11.07-25/15

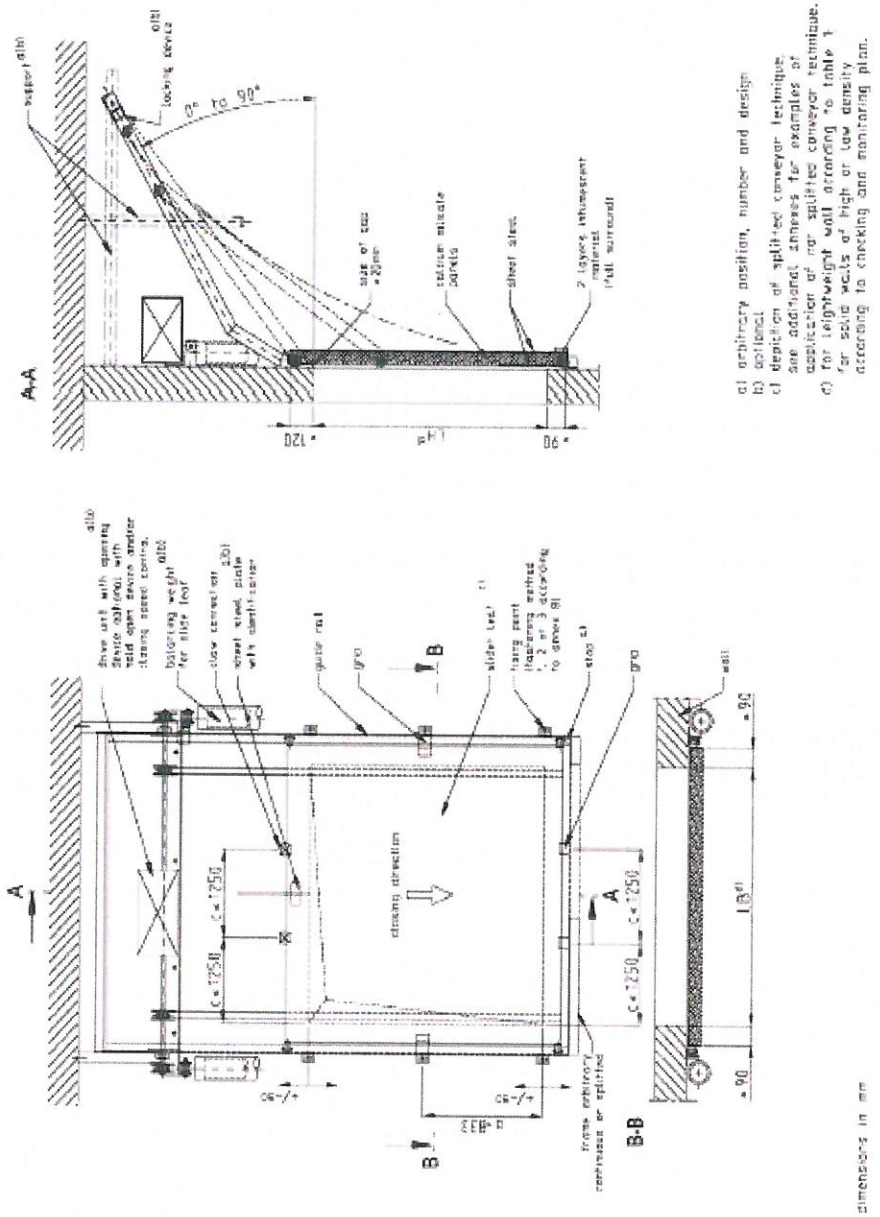

abs EI SLIDE	Annex 4
Overview – closing direction tilting on the wall downwards from above (maximum allowable slider leaf weight: 285 kg) Wall installation	

Page 13 of European Technical Assessment
ETA-16/0938 of 27 April 2018

English translation prepared by DIBt

Deutsches Institut für Bautechnik DIBt

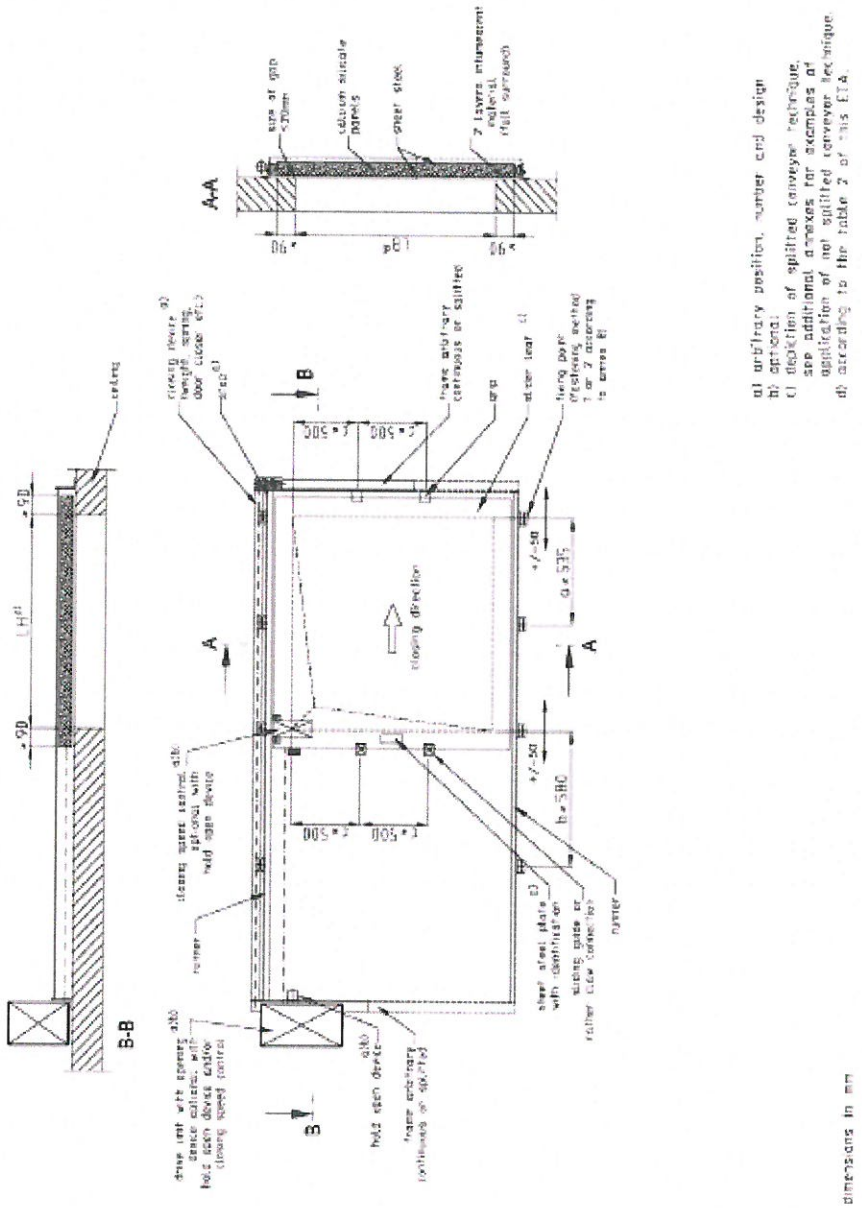

abs EI SLIDE	Annex 5
Overview – horizontal closing direction On-floor installation	

Page 14 of European Technical Assessment
ETA-16/0938 of 27 April 2018

English translation prepared by DIBt

Deutsches Institut für Bautechnik DIBt

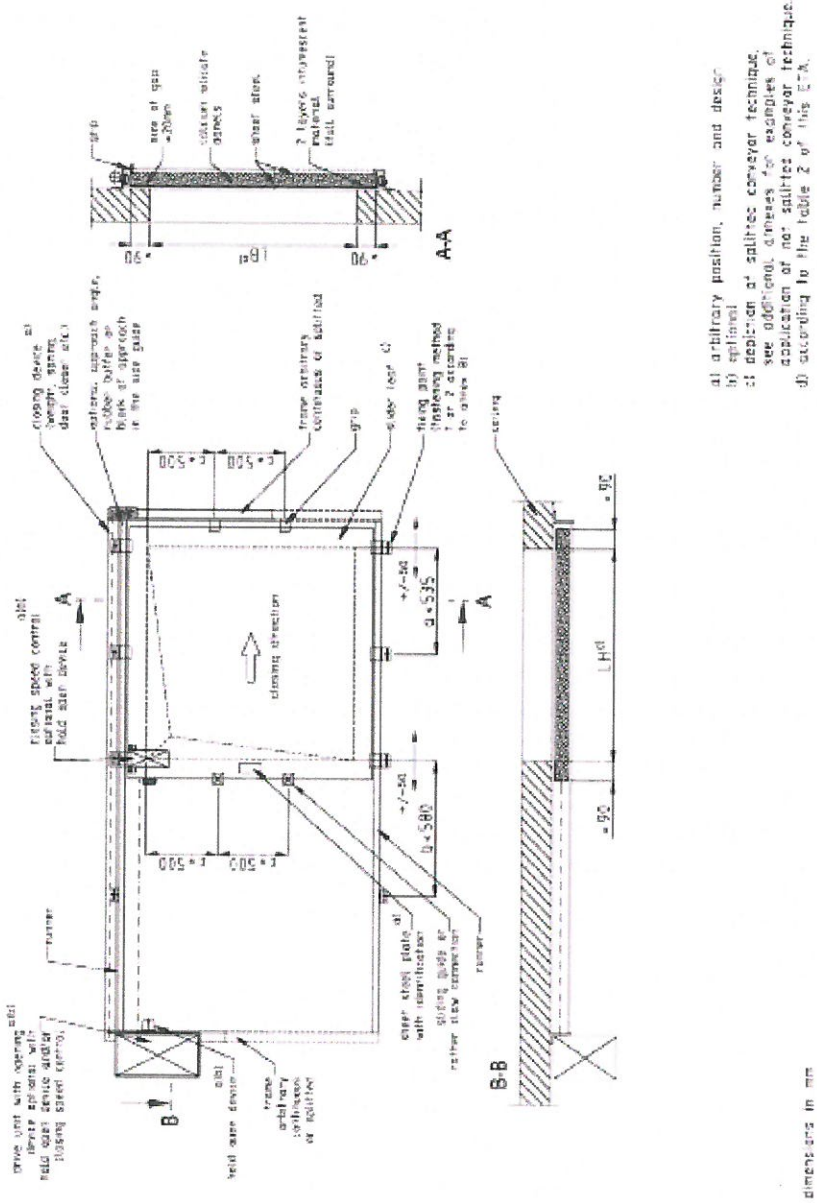

abs EI SLIDE	Annex 6
Overview – horizontal closing direction+ Installation beneath the ceiling	

Page 15 of European Technical Assessment
ETA-16/0938 of 27 April 2018

English translation prepared by DIBt

Deutsches Institut für Bautechnik DIBt

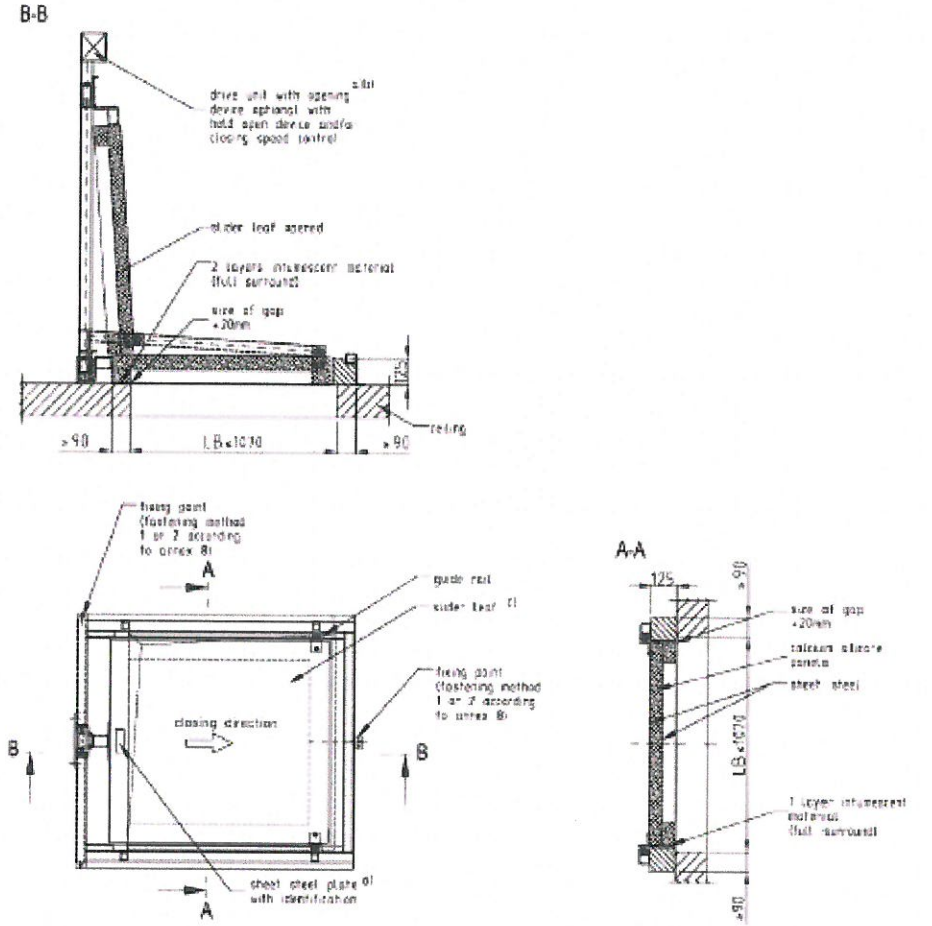

a) arbitrary position, number and design
b) optional
c) depiction of splitted conveyor technique, see additional annexes for examples of application of not splitted conveyor technique.

dimensions in mm

abs EI SLIDE	Annex 7
Overview – closing direction tilting on the floor (maximum allowable slider leaf weight: 85 kg) Floor installation	

fastening method 1
(attachment to solid walls and ceilings of high density, and solid walls and on solid ceilings of low density):

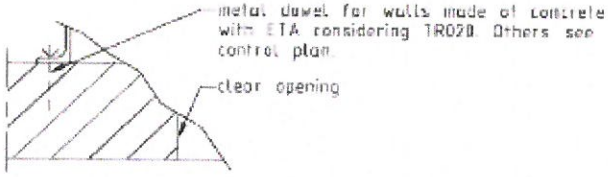

fastening method 2
(attachment to solid walls and on/under solid ceilings of high density and low density):

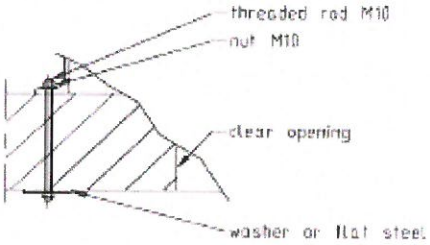

fastening method 3
(Lightweight plasterboard faced steel stud partition EI90):

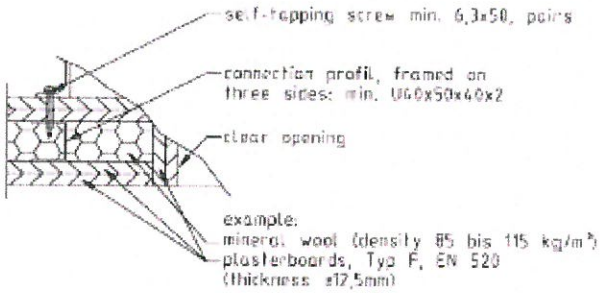

abs EI SLIDE	Annex 8
Types of connection to the bordering component Fastening methods	

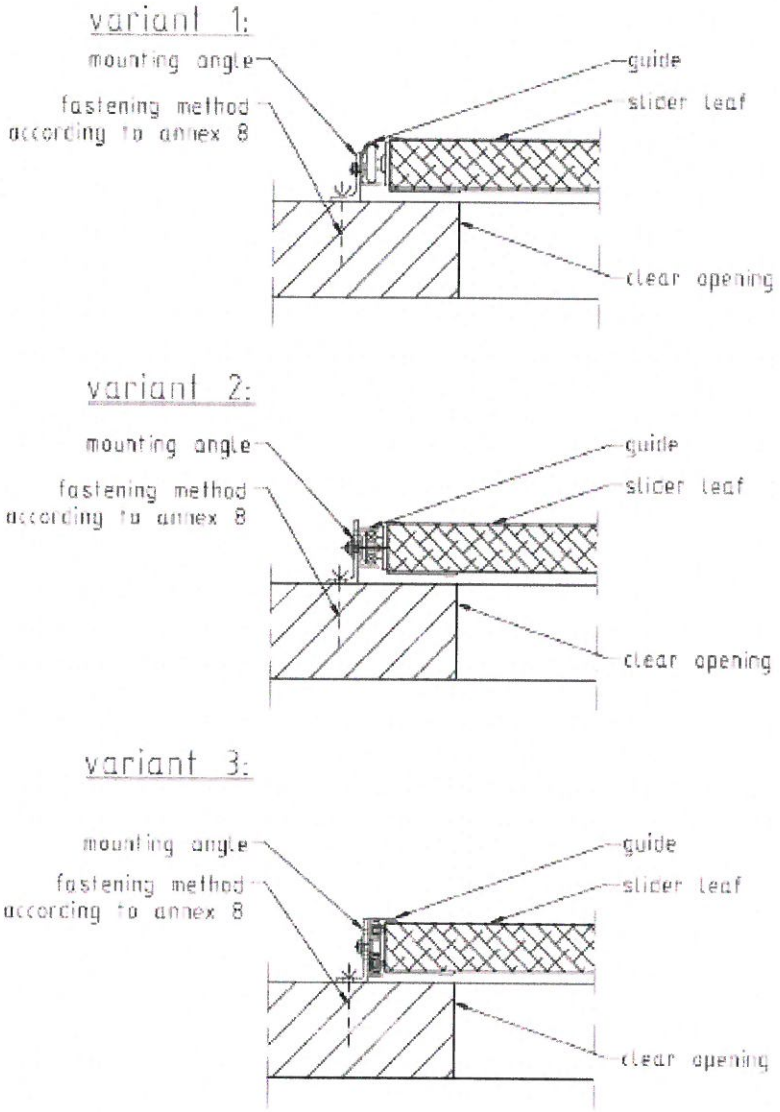

abs EI SLIDE	Annex 9
Types of connection to the bordering component Vertical guide Wall installation	

variant 1: hanging slider leaf

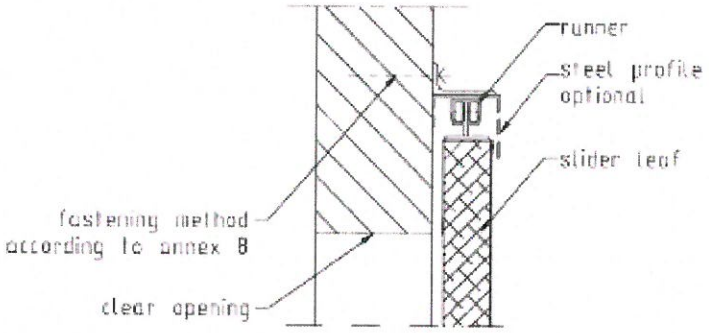

variant 2: standing slider leaf

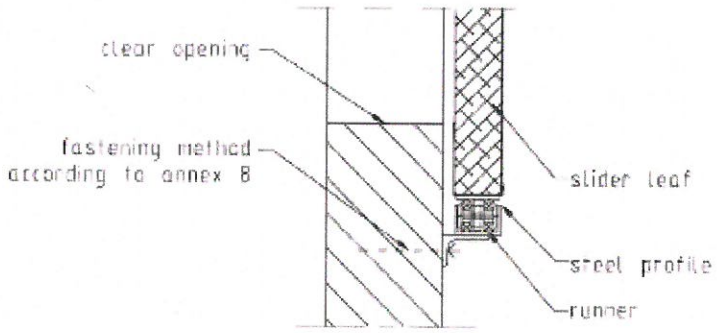

abs EI SLIDE	Annex 10
Connection to the bordering component, horizontal closing direction, wall installation - variant 1: hanging slider leaf (maximum weight of the slider leaf acc. HELM-rail) - variant 2: standing slider leaf (maximum weight of the slider leaf: 285 kg)	

variant 1:

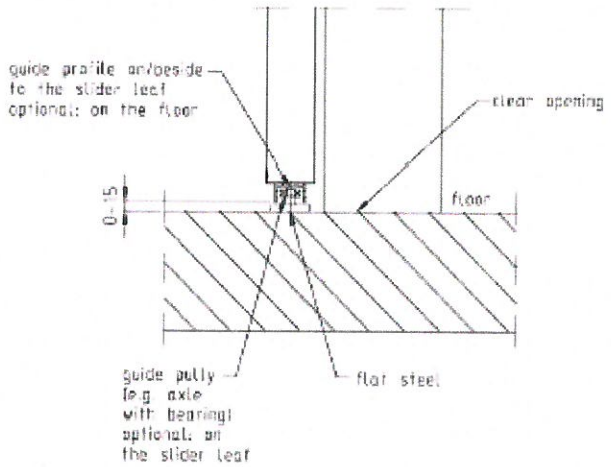

variant 2:

for installation in elevated position

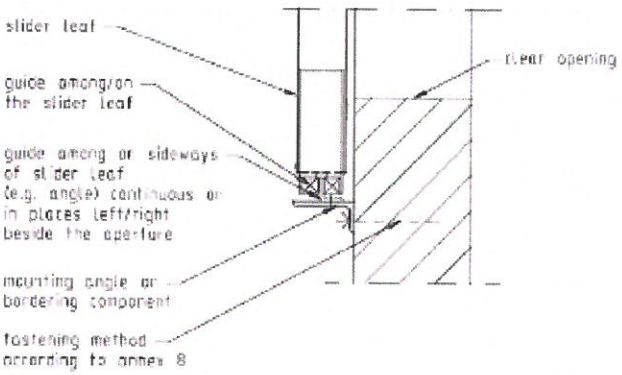

abs EI SLIDE	Annex 11
Types of connection to the bordering component Guide rails below and in elevated position Wall installation	

variant 1:

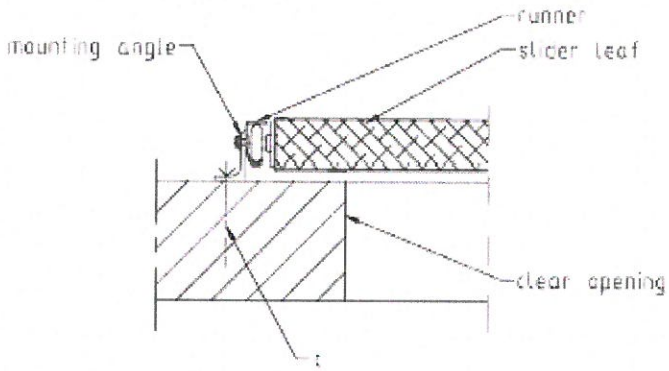

variant 2:

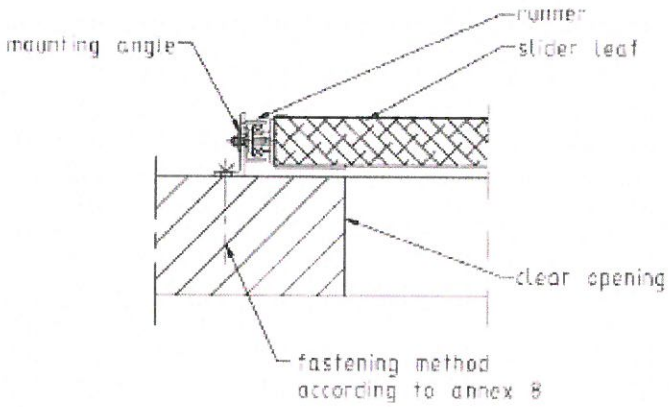

abs EI SLIDE	Annex 12
Types of connection to the bordering component Running rail On-floor installation	

variant 1:

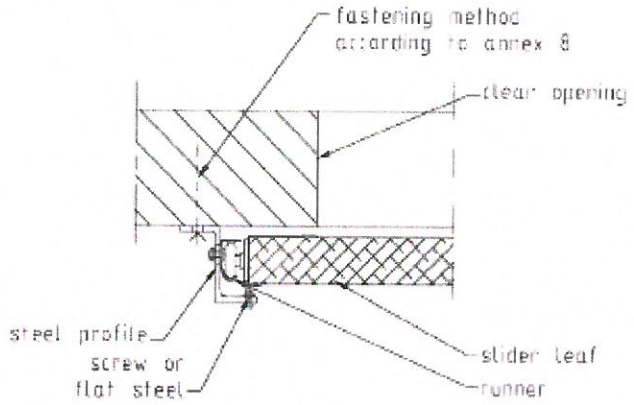

variant 2:

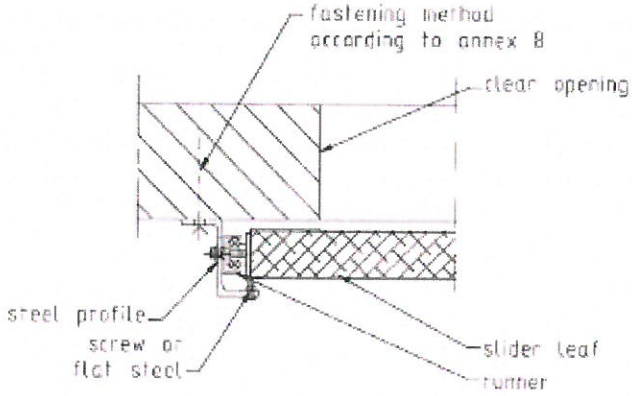

abs EI SLIDE	Annex 13
Types of connection to the bordering component Running rail Installation beneath the ceiling	

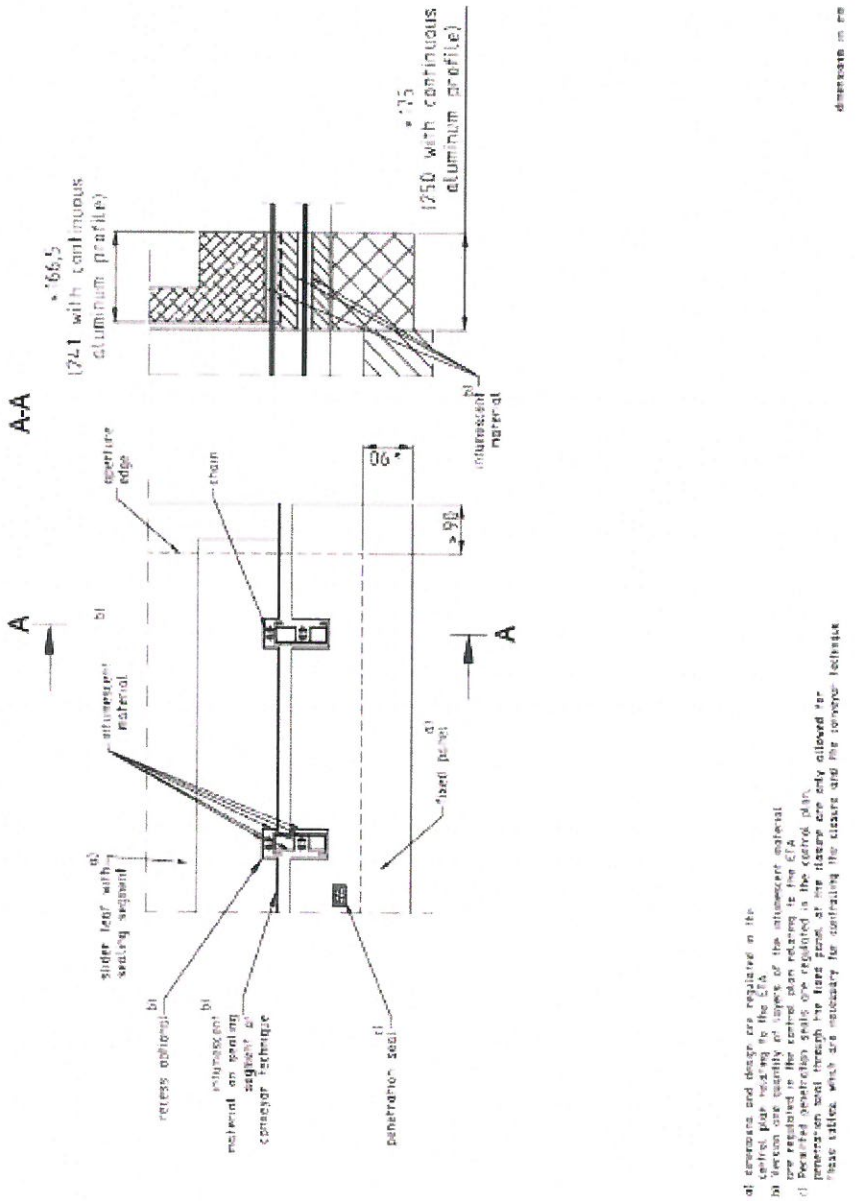

abs EI SLIDE	Annex 14
Detail – sealing of the continuous conveyor technique - sealing segment and fixed panel for chain conveyor	

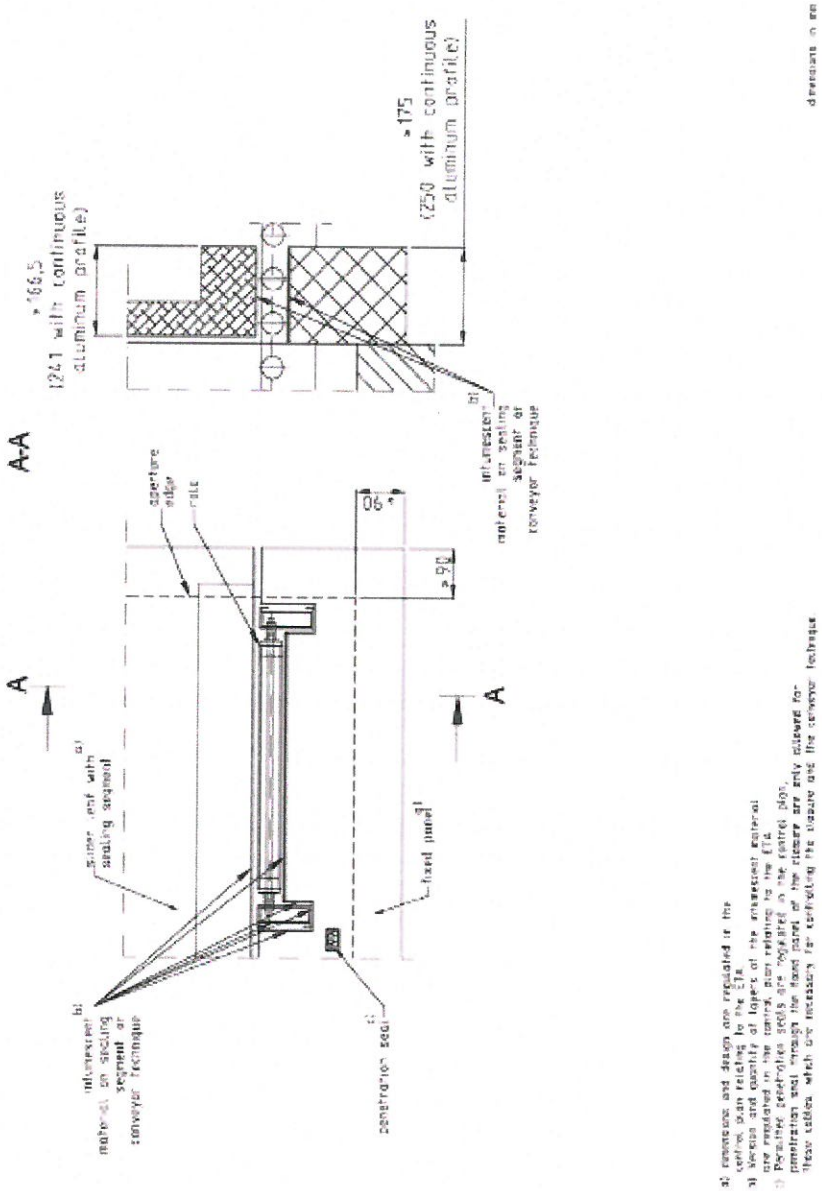

abs EI SLIDE	Annex 15
Detail – sealing of the continuous conveyor technique - sealing segment and fixed panel for roller conveyor	

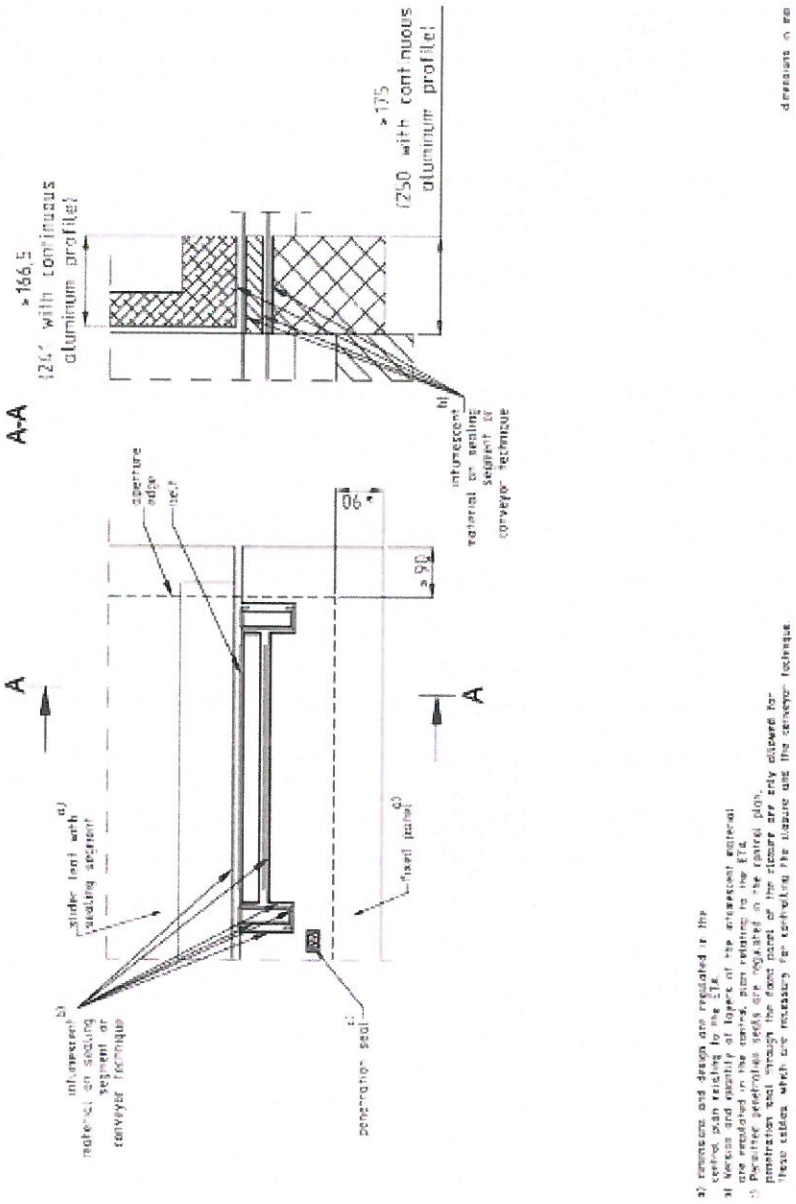

abs EI SLIDE	
Detail – sealing of the continuous conveyor technique - sealing segment and fixed panel for belt conveyor	Annex 16

Page 25 of European Technical Assessment
ETA-16/0938 of 27 April 2018

English translation prepared by DIBt

Deutsches Institut für Bautechnik DIBt

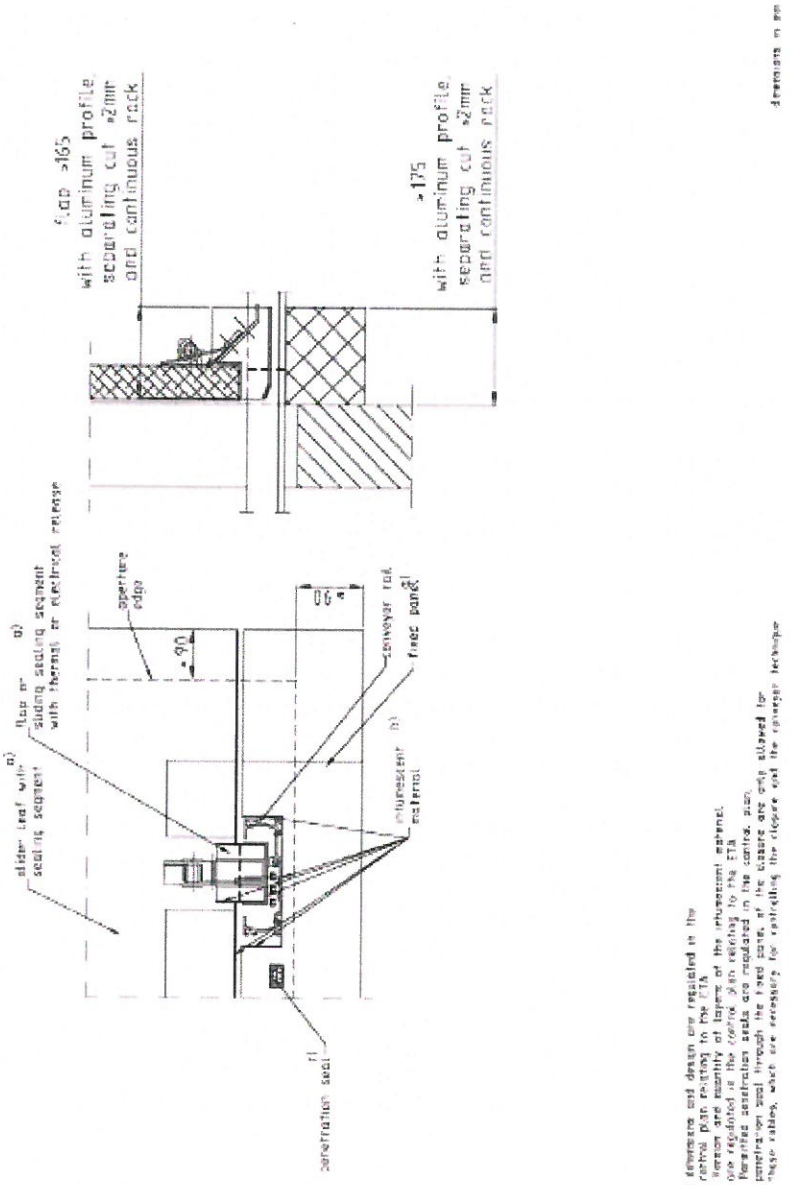

abs EI SLIDE	Annex 17
Detail – sealing of the continuous conveyor technique - sealing segment and fixed panel for container conveyor - with folding or sliding sealing segment	

Page 26 of European Technical Assessment
ETA-16/0938 of 27 April 2018

English translation prepared by DIBt

Deutsches Institut für Bautechnik DIBt

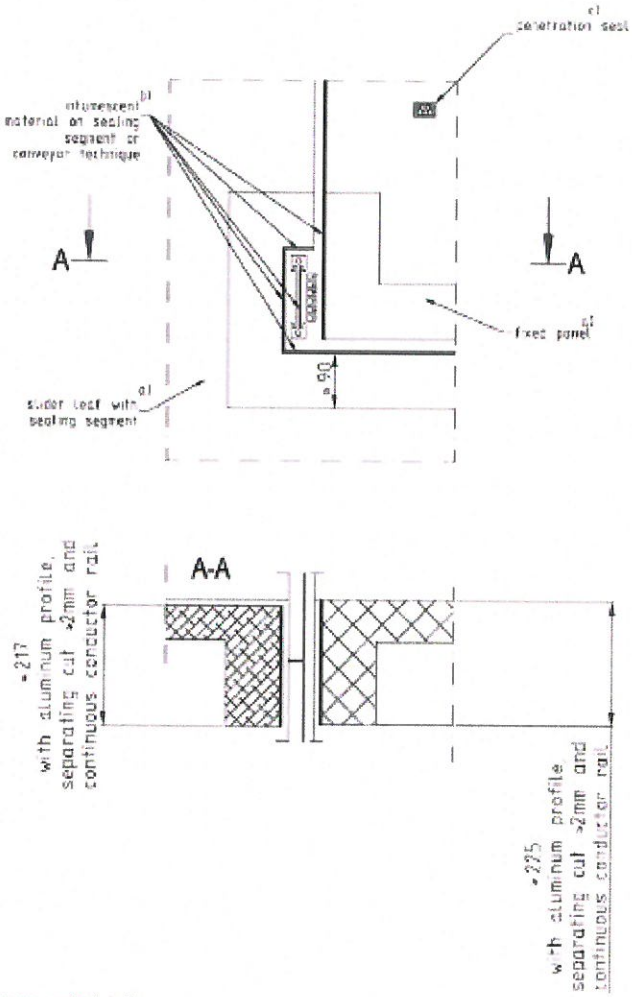

a) dimensions and design are regulated in the control plan relating to the ETA
b) Version and quantity of layers of the intumescent material are regulated in the control plan relating to the ETA
c) Permitted penetration seals are regulated in the control plan, penetration seal through the fixed panel of the closure are only allowed for those cables, which are necessary for controlling the closure and the conveyor technique

Dimensions in mm

abs EI SLIDE	Annex 18
Detail – sealing of the continuous conveyor technique - sealing segment and fixed panel for electric monorail system	

Page 27 of European Technical Assessment
ETA-16/0938 of 27 April 2018

English translation prepared by DIBt

Deutsches Institut für Bautechnik DIBt

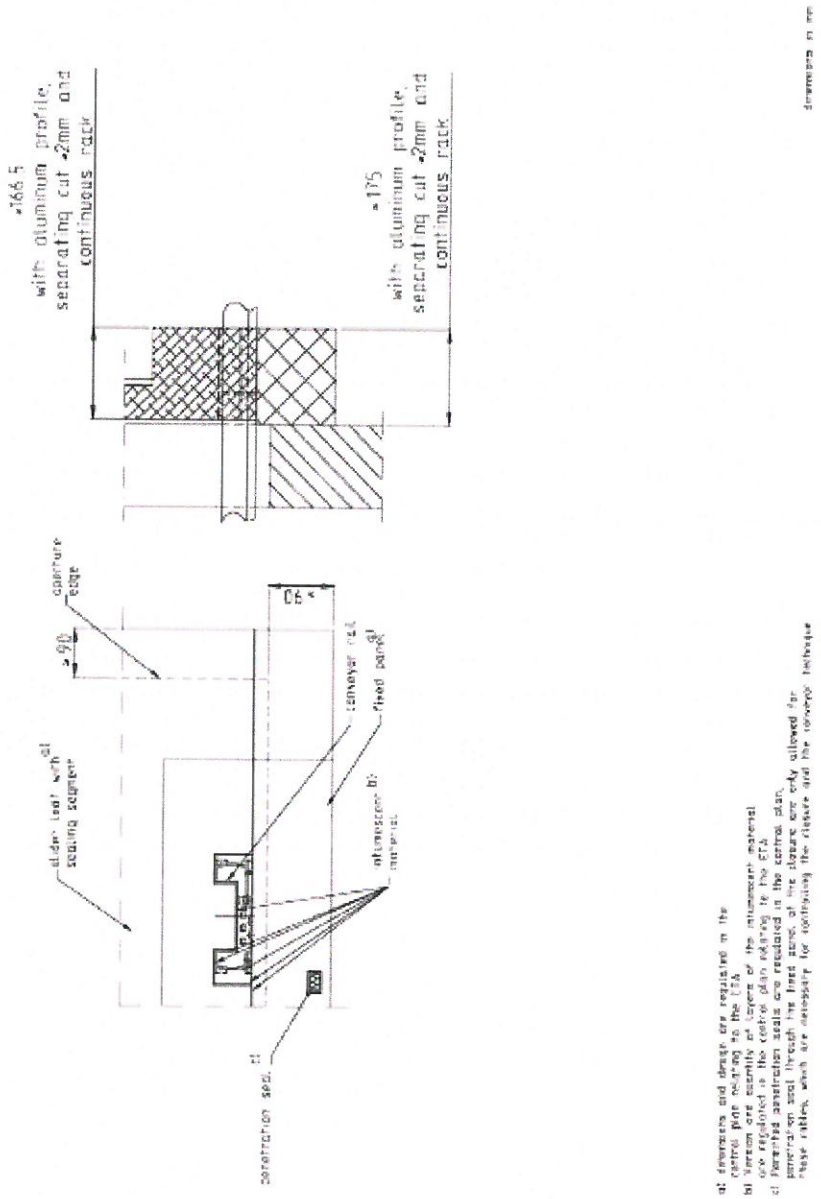

abs EI SLIDE	Annex 19
Detail – sealing of the continuous conveyor technique - sealing segment and fixed panel for container conveyor	

Page 28 of European Technical Assessment
ETA-16/0938 of 27 April 2018

English translation prepared by DIBt

Deutsches Institut für Bautechnik DIBt

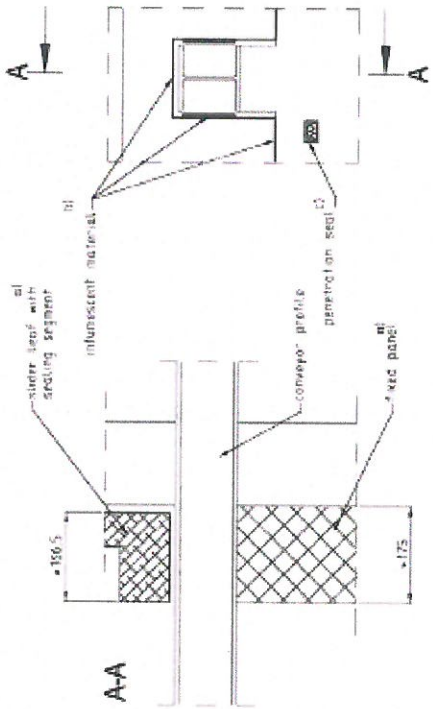

a) dimensions and design are modified in the contra. also relating to the ETA
b) Version and assembly at lasers at the intumescent material are regulated in the contra. also relating to the ETA
c) Permitted penetration seals are regulated in the control plan. penetration seal through the fixed panel of the closure are only allowed for flange rollers, which are necessary for extending the slider and the conveyor technique

dimensions in mm

abs EI SLIDE	Annex 20
Detail – sealing of the continuous conveyor technique - sealing segment and fixed panel for crane runway (H-beam)	

Page 29 of European Technical Assessment
ETA-16/0938 of 27 April 2018

English translation prepared by DIBt

Deutsches Institut für Bautechnik DIBt

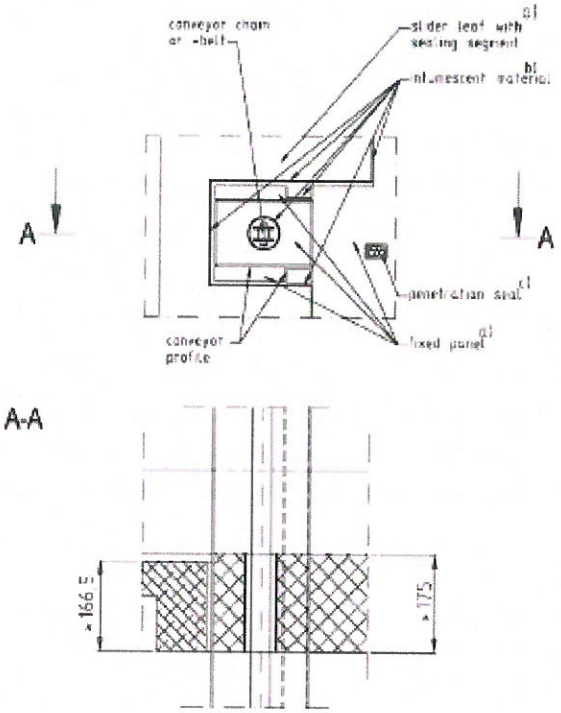

a) dimensions and design are regulated in the control plan relating to the ETA
b) Version and quantity of layers of the intumescent material are regulated in the control plan relating to the ETA
c) Permitted penetration seals are regulated in the control plan, penetration seal through the fixed panel of the closure are only allowed for those cables, which are necessary for controlling the closure and the conveyor technique

dimensions in mm

abs EI SLIDE	Annex 21
Detail – sealing of the continuous conveyor technique - sealing segment and fixed panel for jack - floor installation	

Page 30 of European Technical Assessment
ETA-16/0938 of 27 April 2018

English translation prepared by DIBt

Deutsches Institut für Bautechnik DIBt

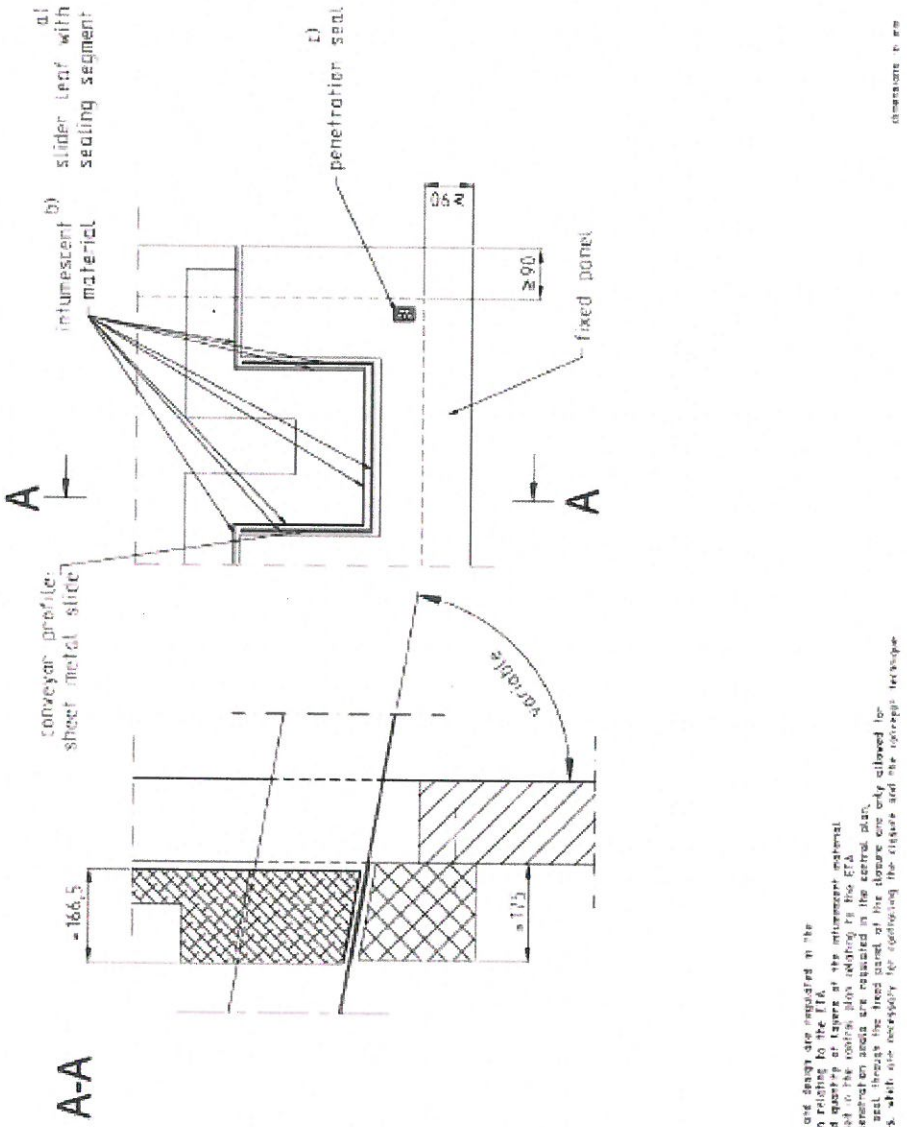

abs EI SLIDE	Annex 22
Detail – sealing of the continuous conveyor technique - sealing segment and fixed panel for slide	

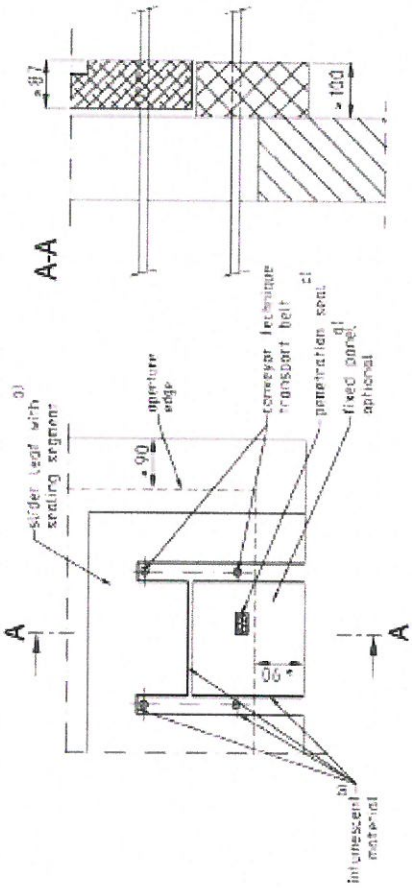

a) dimensions and designs are regulated in the control plan relating to the ETA
b) formats are quantity of layers of the intumescent material are regulated in the control plan relating to the ETA
c) Permitted penetration seals are regulated in the control plan. Each penetration seal through the fixed parts of the closure are only allowed for "tray cables, which are necessary for installing the closure and the conveyor technique

dimensions in mm

abs EI SLIDE	Annex 23
Detail – sealing of the continuous conveyor technique - sealing segment and fixed panel for tray conveyor (o-belt)	

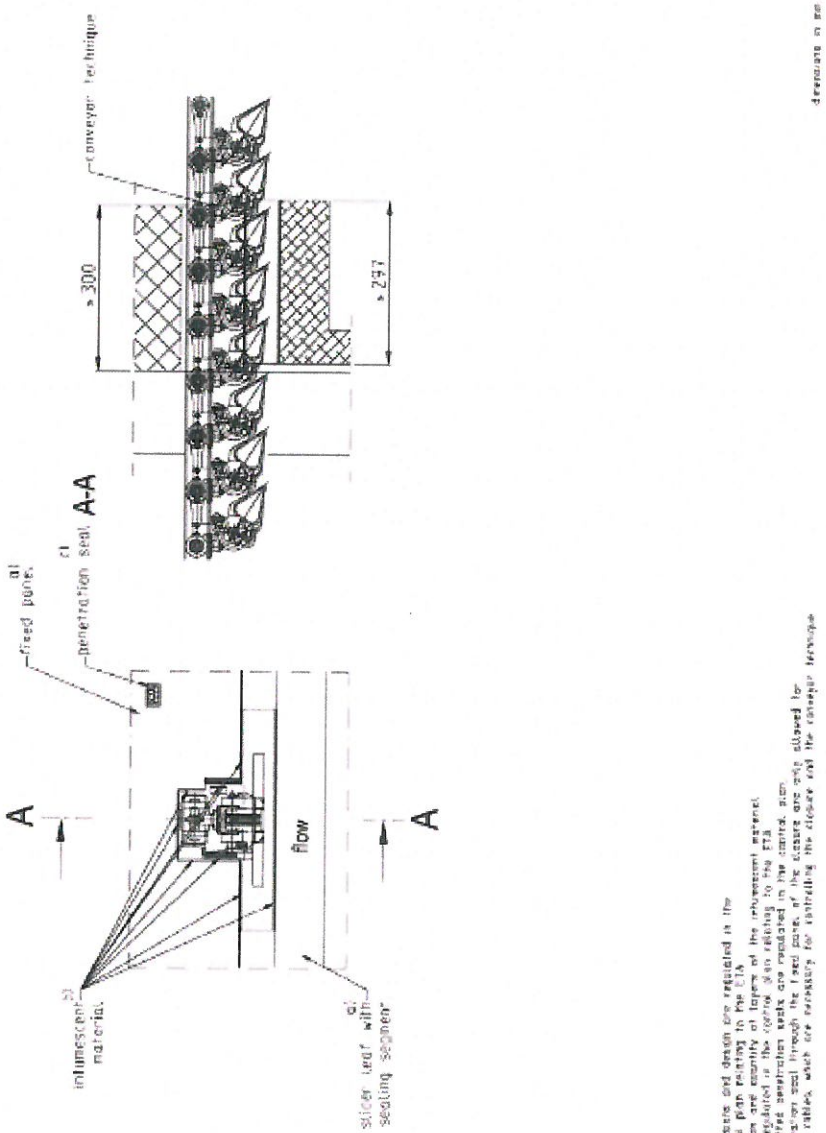

abs EI SLIDE	Annex 24
Detail – sealing of the continuous conveyor technique - sealing segment and fixed panel for paper conveyor (flow line)	

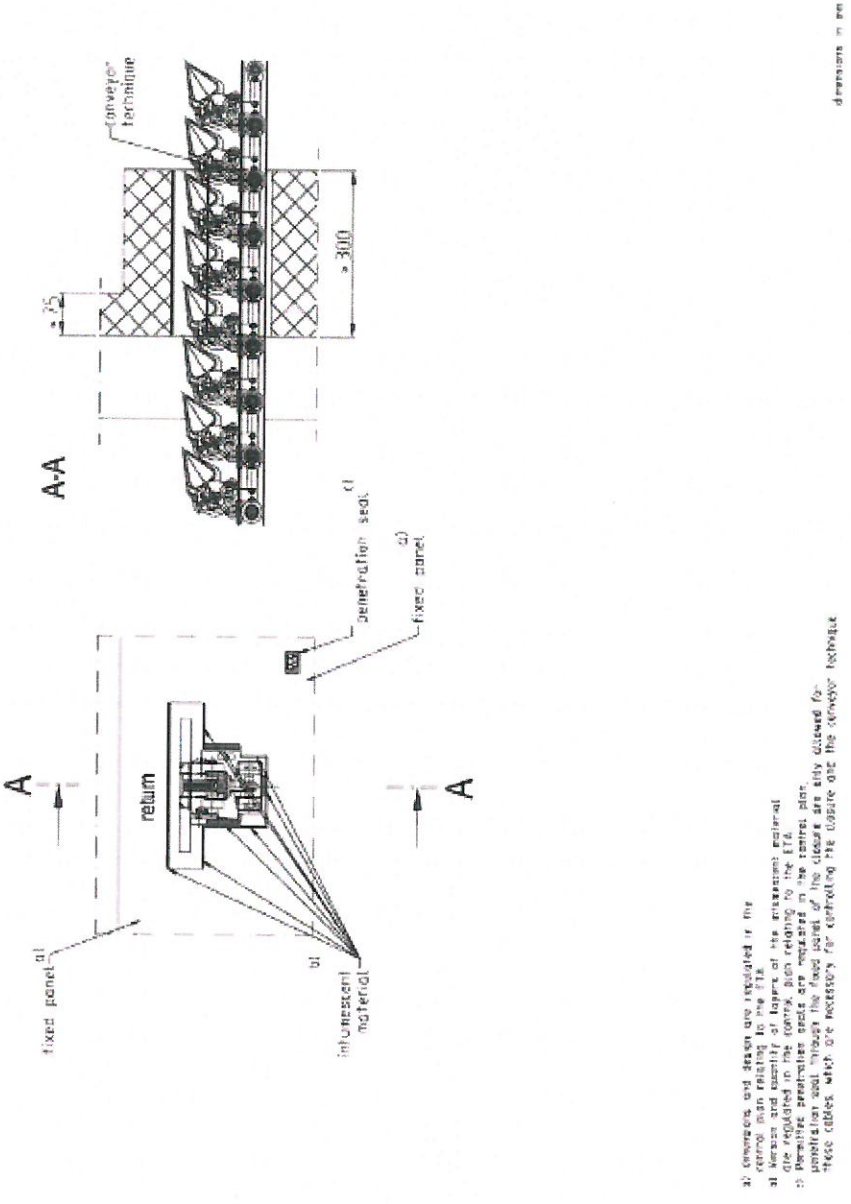

abs EI SLIDE	Annex 25
Detail – sealing of the continuous conveyor technique - sealing segment and fixed panel for paper conveyor (return in the fixed panel)	

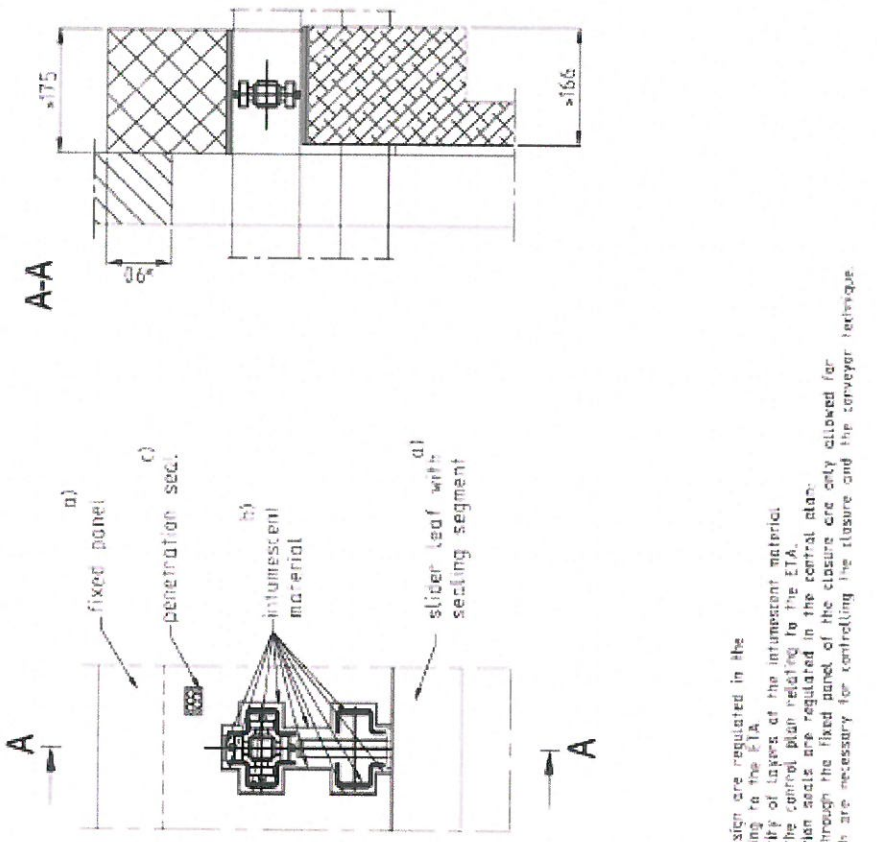

a) dimensions and design are regulated in the control plan relating to the ETA
b) Version and quantity of layers of the intumescent material are regulated in the control plan relating to the ETA.
c) Permitted penetration seals are regulated in the control plan. penetration seal through the fixed panel of the closure are only allowed for those cables, which are necessary for controlling the closure and the conveyor technique.

abs EI SLIDE	Annex 26
Detail – sealing of the continuous conveyor technique - sealing segment and fixed panel for "power and free" - conveyor	

Z15249.18 8.11.07-25/15